ESSENTIAL DENTAL PRODUCTS FOR THE LAB

HANDLER® Manufacturing, LLC

Red Wing® Lathes

Low base 4 1/2" [11.4cm] shaft height
High base 6" [15.2cm] shaft height

Click or scan to view



BEST IN CLASS



26A-CPS - The **COMPLETE POLISHING SYSTEM** - a low base dental lathe with the inclusion of a left-sided spindle for polishing wheels, a Jacobs-style chuck for right-hand side with use of burs and shanks up to ¼" diameter, 550 Porta-Vac for dust collection, 86D splash hood for containment of pumice, and 3-D Model & Flexible Partial Polishing Kit



26A and 26 Red Wing® Lathe

1/4 HP, 1725/3450 RPM two-speed lathe with low base or high base for use on top of laboratory bench. Maintenance free standard dental, tapered shafts—each includes a right and left chuck remover for easy removal of standard dental chucks.

26A - Low Base
26 - High Base



Typhoon Bur sand Cotton Buffs available for additional cost.

26A-KIT and 26-KIT Red Wing® Lathe

1/4 HP, 1725/3450 RPM two-speed lathe with low base or high base for use on top of laboratory bench. Includes one 7L spindle on the left side for buffing wheels, and one #18 Atlas Precision Chuck on the right that can hold burs and mandrels up to 1/4" shank.

26A-Kit - Low Base
26-Kit - High Base



26A-TS and 26-TS Red Wing® Lathe

Two-speed, 1/4HP Red Wing® Lathe. Complete with 7L (left) and 7R (right) tapered spindles for polishing with Handler buffing wheel.

26A-TS- Low Base
26-TS - High Base



16B and 16B-1 Red Wing® Lathe with Chuck Changer

Comes with factory-installed Chuck Changer on the right side of a Red Wing® Lathe. The ultimate in chuck changing efficiency at both low and high lathe speeds, while obtaining the accuracy and speed of interchanging both 3/32" [2.4 mm] and 1/4" [6.4 mm] burs, mandrels and chuck accessories while the lathe is in motion.

16B - Low Base
16B-1 - High Base



Foredom M.BL Bench Lathe has a high torque, permanent magnet motor that is extremely quiet and smooth running. Cast iron base has mounting holes and suction cup feet for a secure hold on the work surface.

1/6 HP, variable speeds from 500 – 7,000 RPM. Width between spindle tips of 13" (330mm), an overall height of 5-1⁄8" (130mm). Height of spindle center from table surface is 3-3⁄4" (95mm). Weight is 7.5 lb (3.4kg).

Bench Lathe Kits
SKU:
M.BL - with Tapered Spindles
K.3340- with Collet Holder and Wheel Mandrel
K.3390 - with Buffs and Compound Kit
K.3280 - with Filter Hood
K.BL-DCH - with Two Dust Hoods

ACCESSORIES - FOR LATHE OR MICROMOTOR



7 Tapered Steel Chuck
Precision manufactured of alloy steel, this chuck is built for placement onto lathes and polishing motors containing standard dental tapered shafts.
7L (Left) or 7R (Right)
Shipping Wgt.: 6 oz [107 g]
Unit Dimensions: 5/8" x 3 5/8" L



7B Tapered Brass Chuck
The 7B Tapered chuck is made of brass to provide easier on/off placement onto tapered dental shafts, causing less shaft wear.
7BL (Left) or 7BR (Right)
Shipping Wgt.: 6 oz [107 g]
Unit Dimensions: 5/8" x 3 5/8" L



Stone Chucks
Stone Chucks are designed to accommodate abrasive wheels with various inside diameters. For use only on tapered lathe shafts.
Shipping Wgt.: 6 oz [107 g]
Unit Dimensions: 5/8" Shank Diameter x 2" L [2cm x 9cm]



9 Arbor Band
Designed to accommodate 3/4" diameter x 3/4" wide [1.9cm x 1.9cm] abrasive bands. Manufactured of alloy steel and plated to fit onto standard dental tapered shafts.
9R (Right)
Shipping Wgt.: 8 oz [227 g]
Unit Dimensions: 4 7/8" L x 5/8"
Shank Diameter: 1/4"



18 Atlas Precision Chuck
The 18 Atlas chuck is a precise "Jacobs type" chuck for use with chuck accessories having a diameter of .001" [0.03mm] to .250" [6.4mm]. The 18 Atlas chuck attaches to the right shaft of a dental lathe with standard dental tapered shafts. For right shaft only.
Shipping Wgt.: 1 lb [0.5 Kg]
Unit Dimensions: 2 1/2" L x 1 1/4"



13-1 Tapered Chuck
Designed with 1/4" [0.6cm] shank for use in Jacobs type chucks.This tapered chuck is built to accept small buffs, brushes and lead-centered wheels. Made of alloy steel and plated.
Specify 13-1L (left) or 13-1R (right) when ordering.
Shipping Wgt.: 4 oz [113 g]
Unit Dimensions: 2 5/8" L x 1/2"
Shank Diameter: 1/4"

Click or scan to view



AK3361 30-piece Dental Lab Kit
Polishing Valplast®, Flexite®, and other nylon denture materials. Includes: 6-Pks of 3" Scotch-Brite Radial Bristle Discs in 80, 220, 400, & 14,000 grit. Also 3" cotton buff, 2 right & 2 left side spindle adapters, and bar of platinum white polishing compound. **7,000 RPM Max Speed**

Inter-Brushes for Bench Lathes
7,000 RPM Max Speed
3,000 -5,000 RPM Optimum Speeds
Designed for pre-polishing resins in narrow areas such as those used in dentures. Choose from one row of bristles or two rows. Available in three different high quality, natural materials:
Black Chungking is a stiff hair for high abrasiveness and durability.
Brown Horse Hair produces no heat, leaves surface details and does not create grooves.
White Goat Hair creates a very smooth surface and reaches into gaps between surface details.
Made in Germany



Colibri Lathe Brushes
7,000 RPM Max Speed / 3,000 - 5,000 RPM Optimum Speeds Colibri Lathe Brushes for the Bench Lathe are made of high quality Black Chungking bristles with a layer between the rows of bristles of woven canvas. The durable, stiff bristles provide maximum abrasiveness when used with compound or pumice. The woven canvas inlay holds mixtures of water and pumice to maximize production time and keep the work in progress moist.



Lathe End Brushes
7,000 RPM Max Speed / 3,000 - 5,000 RPM Optimum Speeds
25 mm diameter x 30 mm long (1" diameter x 1.18" long)
These brushes fit onto the end of the bench lathe's tapered spindles. Choose from:
Black Chungking is a stiff hair for high abrasiveness and durability.
White Goat Hair very soft bristles create a smooth surface and reach into gaps between surface details.



Abrasofti Lathe Brushes
7,000 RPM Max Speed
3,000 - 5,000 RPM Optimum Speeds
Abrasofti Lathe Brushes have a layer of non-woven firm fiber between outer layers of white Chungking bristles. The non-woven fiber is porous and holds the water and pumice mixture. They decrease the time it takes to polish plastics by half!



Cotton Buffs - Used with buffing compounds or polish on plastic, acrylic metal or leather orthotics.



Tungsten Carbide Burs - 1/4"(6.4 mm) shank



1/4"shank Typhoon's long lasting, structurally aligned tungsten carbide points are used in handpieces and rotary tools that can hold these larger burs. Ideal for use on hard and soft wood, acrylic, plaster, hard rubber, fiberglass, and die stone in the dental lab industry.

Sanding Sleeves with 1/4" shank mandrels - for use on bench lathes

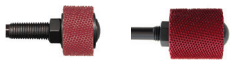

FOREDOM 3/32" (2.35 mm) shank mounted Rotary Accessory Assortment Kits
Developed and tested by Foredom, these new assortments provide superb quality for polishing, buffing, grinding and cleaning on a wide variety of materials.

Natural bristle brushes, cleaning, preparing surfaces, buffing and polishing, and for use with polishing compounds with– chungking for stiff, horsehair for firm, and goat hair for soft bristles are evenly held with steel rings.



12-pc Mounted Brush Assortment. - AK51376
Cup Brushes: White Goat Hair and Black Bristle.
End Brushes: White Goat Hair, Black Bristle, Steel Wire, and Brass Wire.
Wheel Brushes: Grey Goat Hair with Suede inner layer, White Goat Hair, Black Bristle, Brass Wire, Brush-Steel Wire, and Stainless Steel Wire.



12-pc Mounted Brush and Buff Assortment - AK51377
25,000 rpm Max. Speed Felt and cotton buffs are for buffing and polishing with compounds on hard and soft metals, metal plate, precious metals, plastics, wood, acrylic, and painted surfaces.
Includes:
Brown/White Bristle Mix, 3-layer Cotton String Buff, & 3-layer Felt Buff



12-pc Mounted Radial Disc Assortment - AK11989
20,000 rpm Max. Speed in Forward Rotation ONLY Discs with thin bristles for hard to reach areas do not require compounds. Each mandrel holds 3 discs.



12-pc Mounted Polisher - AK52212
Assortment 10,000 rpm Max. Speed Satin Finishers have nylon heads impregnated with various abrasive grits for cleaning and obtaining matte finishes on metal or plastic.
Includes: Muslin Buffs– Yellow, Natural, Snow White; Suede Wheel Brown 5-Layers; Cotton String Buff 2-layers; Cotton Mop; Felt Buff 3-Layers;
Fiber Buffs: Light Red– extra coarse, Tan– coarse, Dark Red– medium, Gray– fine, and Green– extra fine.



92-pc Radial Disc Assortment - AK11986M
20,000 rpm Max. Speed in Forward Rotation ONLY* Discs, with thin bristles for hard to reach areas, do not require compounds.
Includes 2— 3/32" shank Foredom A-M1 screw mandrels.

Click or scan to view



A-10080
For ALL Size Shanks
Rotating Bur and Tool Holder, ideal for dental labs.
- Organizes 126 accessories with 1/16", 3/32", 1/8", and 1/4" shanks.
- Measures: 6-1/2" wide by 4" high (165 x 102mm)
- Holds 69– 3/32" or 1/8" burs (in 2-step holes),12–1/4" burs, and 45– 1/16"burs. Burs not included.

MICROMOTOR LAB HANDPIECES

Click or scan to view

K.1040
High Speed Rotary Brushless Micromotor



Slow, Steady and Smooth HIGH TORQUE START.

Two speed settings:
- Setting 1 - Full speed range up to 50,000 RPM.
- Setting 2 - 500 RPM - 5,000 RPM.

K.1040 Kit Includes: Control, Handpiece with 3/32″ (2.35mm) collet & additional 1/8″ collet, Variable Speed Foot Control Cradle, Handpiece Holder and Spare Fuse.

BEST IN CLASS

K.1070
High Speed Rotary Brush Type Micromotor



- Runs at speeds up to 38,000 RPM.
- Ideal for precise, high speed work.
- Powerful even at minimum speeds
- 115 or 230 Volt -The motor is in the handpiece.
- Handpiece options: 3/32″ (2.35mm) collet & 1/8″ collet

K.1050
High Torque/High Speed Dual Port Brushless Micromotor



Port on back of control box for Brushless Handpiece and One on front for Brush Type Micromotor Handpiece.
- Sealed housing eliminates dust, noise and vibration.
- Permanently lubricated, shielded ball bearings require no lubrication.
- Comes with spare fuse in fuse holder and collet changing wrench inside handpiece box. Collets can be installed and changed.

K.2030
Portable Micromotor



The Foredom K.2030 Portable Brushless Rotary Micromotor Kit delivers professional-grade precision in a cordless design ideal for dental lab applications. Featuring advanced brushless motor technology, this system operates cooler and quieter while providing extended motor life with no brush replacement needed. Variable speed control reaches up to 35,000 RPM with forward/reverse rotation capability, offering precise control for detailed dental work. The rechargeable lithium-ion battery provides 6-7 hours of runtime, while the low-vibration design minimizes hand fatigue during extended procedures. Kit includes handpiece options with either 2.35mm (3/32") or 1/8" quick-change collets, handpiece cradle, and charging system, backed by a 2-year warranty.

VACUUM FORMING

Click or scan to view



BEST IN CLASS

The 55VF is Handler's latest addition to a robust portfolio of dental lab products.

This is an economical way to process:
- Bleaching trays
- Mouthguards
- Implant splints
- Temporary splints
- Custom impression trays
- Denture bases
- Copings
- Temporary crowns and bridges
- Orthodontic appliances

The 55VF can accommodate nearly all dental vacuum forming applications.



SLICK-88/SPL88 - Dry Teflon/Silicone Spray

Perfect for when separating 3D printed models. The ONLY industry application to combine Teflon & silicone.

SPL88 is formulated from the two best wet/dry separating/lubricating agents: silicone and Teflon®. It is a non-flammable, environmentally safe dry spray. It is chemically bonded in a patented process to produce an extremely effective dry spray that is ideal for separating, protecting and/or lubricating.

Shipping Wgt.: 2 lb [1.0 Kg]
Unit Dimensions: 3" Diameter x 8" H [7.6cm x 20.3cm]



VFM – Variety of vacuum forming material in resealable, pouch to ensure freshness. Available materials: Night Guard Material – Laminate .120 (3 mm), Night Guard Material - Hard/Soft .120 (3 mm), Temp C&B Form Material – Nonstick .020 (.50 mm), Splint Material – .060 (1.5 mm), Surgical Guide Material – .080 (2 mm), Whitening Tray Material – .020 (.50 mm), Whitening Tray Material – EVA .040 (1 mm), Retainer Material – Super Clear .030 (.75 mm), Trial Pack

MODEL TRIMMERS

Click or scan to view



Model Trimmers feature a 1/4" thick, reversible, reinforced Carbo-Dent wheel, and include a stainless steel spray tube, water connection, and a drain hose. The unit has rubber suction cup feet for enhanced stability and water flow. It has a swing-open front for easy maintenance, an internal gutter for water runoff, and a full-radius water spray that effectively cleans the wheel. Additional features include a drain trough around the model tray to prevent leaks, a large 1" water exhaust, and a motor cover. The unit is shipped fully assembled with minimal setup required. It has a durable, baked coating and operates on 115V/60Hz.

Available options include:
- Factory-installed water solenoid to automatically activate water flow.
- High performance balanced, studded diamond wheel.

10" MODEL TRIMMERS

31 Model Trimmer - 1/3 HP ball bearing, capacitor start motor.
Shipping Wgt.: 48 lbs [21.8 Kg]
Unit Dimensions: 16" D x 13" W x 12-3/4" H

BEST IN CLASS

31X Model Trimmer - 1/4 HP ball bearing, capacitor start motor for those desiring lower pricing.
Shipping Wgt.: 48 lbs [21.8 Kg]
Unit Dimensions: 16" D x 13" W x 12-3/4" H

12" MODEL TRIMMERS

32 Model Trimmer - 1/2 HP ball bearing, capacitor start motor, the 32 features a larger frontal opening and additional grinding capacity to trim models faster and easier. Shipping Wgt.: 55 lbs [22.7 Kg]
Unit Dimensions: 16" D x 15" W x 14-1/2" H

32X Model Trimmer - Powered by a 1/3 HP ball bearing, capacitor start motor for those desiring lower pricing and lower torque.
Shipping Wgt.: 55 lbs [22.7 Kg]
Unit Dimensions: 16" D x 15" W x 14-1/2" H

BEST IN CLASS



78-RK Atlas Variable Speed Junior Vibrator
A **three speed** vibrator for use by the dentist or smaller laboratory. 4" [10cm] diameter, removable, rubber covered table Finished in a durable, baked coating.
Shipping Wgt.: 6 lbs [2.7 Kg]
Unit Dimensions: 4-1/2" W x 4-1/2" D x 4" H



78-1 Atlas Heavy Duty Vibrator
- Two frequencies each with variable speed.
- Fully covered large rubber table is built to hold larger flasks and mixing bowls. The rubber top is removable for easy cleaning and replacement.
- Four soft rubber feet

Shipping Weight: 11 lbs [5 Kg]
Unit Dimensions: 8" W x 6 1/2" D x 4-1/2" H

DUST COLLECTION - SMALL



MAFH25 Filter Hood

The Filter Hood was designed to work with Foredom's M. BL Bench Lathe, larger lathes or a flex shaft or micromotor handpiece. Filters dust and larger particles from light grinding and polishing. The MAFH25 has a variable speed, universal voltage motor for either 110V or 220V and is UKCA & CE compliant.Comes with three filters (1ea pleated, polyester and charcoal) that are easy to change and ship to a refiner.

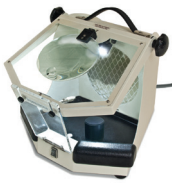

MALC15 FOREDOM Lighted Work Chamber

Foredom's Lighted Work Chamber is compact, semi-enclosed and designed for use with Foredom's MADC20 or other dust collector and compressed air.



52CSU Etcher Catcher

Collect dusts from aluminum oxide sandblasting; excellent for handpiece grinding. Built-in hinged viewport with magnifier provides greater suction capacity to collect dusts in its cleanable, reusable cartridge filter.

LED light and two hand holes help keep dust contained in the cabinet.

Shipping Wgt.: 17 lbs (7.3Kg)
Unit Dimensions: 11" W x 16" D x 9" H (28cmx41cmx23cm).

BEST IN CLASS

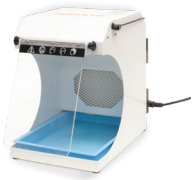

550 Porta-Vac Bench Top Dust Collector

Perfect for bench top light grinding and polishing with a hand piece or lathe.

Removable resin clean out tray, replaceable clear acrylic shield, and reusable, WASHABLE and replaceable pleated rear filter.

Compact and lightweight 550 comes with a LED light. Will collect 0.5 microns of dust and larger particles.

Shipping Weight: 18 lbs
Unit Dimensions: 8-1/2" W x 12" H x 14" D [21cmx30cmx36cm]



62-II Super Sucker II

Develops 110 CFM (cubic feet / minute) at a static pressure of 63" of H20 and is one of the most powerful single station dust collectors available. Disposable HEPA filter bag is easily removable. Internal activated charcoal filter.

Shipping Wgt: 35 lbs [16 Kg]
Unit Dimensions: 10" W x 15-1/2" D x 13" H [25cm x 39cm x 35.5cm]

Up to
two workstations



62 Super Sucker

Develops 225 CFM suction capacity through two top inlets. Disposable paper filter. A secondary polyester filter entraps finer dusts. A third filter is made of activated charcoal. Complete with two fishmouths, two four foot sections of 3" (7.6cm) flexihose and four clamps. Not for use with aluminum oxide.



550A Under Bench Porta-Vac Dust Collector

Disposable HEPA filter collects 0.3 micron. Vacuum motor moves 125 CFM. 6' flexible hose that can be attached to a variety of suction inlets, and remote on/off control foot switch.

Shipping Wgt.: 20 Lbs [9 kg]
Dimensions: 14-1/2" L x 9 1/4" W x 11 1/2" H [37cm x 23.5cm x 29cm]



100C and 200C Dust Extraction System

This multi-use tool can be used as a dust collector, hooked directly to a CAD/CAM milling machine, for synchronized use, connected to some micromotors, and even used with a foot petal!

100C – 11.3" W x 11.6" L x 19" H

200C- 11.3" W x 11.6" L x 29" H

DUST COLLECTION - MEDIUM



MADC20 FOREDOM Dust Collector with Cyclone & Collection Chamber

Filters away dust & debris.It has a hepa filter, cyclone and collection chamber. Cyclone pre-filters 99% of all debris . 2 HEPA filters with Merv rating of 16 eliminate 99.98% of debris down to 0.3 micron. Filters that meet the HEPA standard satisfy certain standards of efficiency such as those set by the United States Department of Energy (DOE).

Up to
two workstations



60UFC Dual Work Station Dust Collector

Drum Cartridge Filters. Easy to clean - easy to replace. Collects 0.5 micron and larger dust particles. Powerful 1/2 HP brushless suction system yields 400 CFM. Comes with two hoses and two fishmouth suction inlets.

Shipping Wgt.: 80 lbs [36.3 Kg]

DUST COLLECTION - LARGE

Click or scan to view

One size dust collector does NOT fit all.

Call us at 800-272-2885 or email customerservice@blackstoneind.com if you need help choosing.



Up to
four
workstations

101 Dust Collector

A 1 HP suction unit designed to provide suction for up to 4 work positions, simultaneously. The 101 dust collector generates 800CFM (cubic feet per minute) through the inlets provided. The unit is finished in a baked, durable coating, runs on 115V/60HZ and ships complete with switch and box type silencer.

Shipping weight: 270 lbs. [108.9 kg]
Unit dimensions: 26" W x 24" D x 41" H [66cm x 61cm x 104cm]



Up to
three
workstations

77DC Dyna Vac

A 3/4HP suction unit designed to provide suction for up to 3 work positions, simultaneously. The 77 dust collector generates 600CFM (cubic feet per minute) through the inlets provided. The unit is finished in a baked, durable coating, runs on 115V/60HZ and ships complete with switch and box type silencer.

Shipping weight: 240 lbs. [108.9 kg]
Unit dimensions: 24" W x 20" D x 38-1/2" H [61cm x 51cm x 98cm]

POLISHING



575 Multi-Functional Bench Top Polishing System

Two suction motors & cartridge filters, two fluorescent lights, two dust collection trays, two pumice pans and one 26A Red Wing® Polishing lathe*.

Shipping Wgt: 115 lbs (Shipped in two cartons)
Unit Dimensions: 32" W x 16" H x 21" D

BEST IN CLASS



76D-3 Bench Top Complete

365CFM (cubic feet per minute), two suction inlets with a model 26A Red Wing® Lathe for light polishing and grinding. Includes two light sockets and two shields. Two reversible and replaceable filters entrap dusts as small as 5-10 microns and larger. Two aluminum pumice pans are provided. This unit is not recommended for use with gypsum or ALO.

Shipping wgt.: 105 lbs [48 Kg] – (Ships in two cartons)
Unit dimensions: 29" W x 20-1/2" D x 13" H



60FC-TS Polishing Unit

Click or scan to view

Two drum cartridge filters for maximum performance. The powerful 1/3 HP suction motor will process 500 CFM (cubic feet of air per minute). Two mounted aluminum polishing hoods)contain dusts, and debris. Sold complete with a two-speed 26 Red Wing® high base lathe and tapered spindles for buffing wheels.

Shipping Weight: 300 lbs. [136 Kg]
Unit Dimensions: 56" H x 18" D x 32" W — 38" to bench top [142cm x 46cm x 81cm — 97cm]



600JP Polishing Unit

Motor Suction: 1/2 H.P.–115 VOLTS–60Hz–Single-Phase–3450 RPM, ball bearing, capacitor start motor, industrially rated. Supplied with one 26 two-speed lathe, double shaft polishing motor with tapered spindles. Suction Capacity: 400 C.F.M. through two 3" inlets at rear of hood. Filter Area: Drum cartridge filter, which is easily removable for cleaning or replacement. CLEANING: External foot shaker for filter shakedown.

Dimensions: 32" W x 24" D x 45" H
Work Surface: 32" W x 24" D
Shipping Weight: 125 lbs.

DUST COLLECTION - MOBILE WORK STATION

Click or scan to view



MAWS10 FOREDOM Mobile Work Station with Powered Up/Down Motion

3-tiers offer multiple options for arranging your equipment. Top and bottom platforms, middle shelf and extension trays have a 1/4" lip to prevent tools from sliding off.

- Lower Platform when removed, it reveals holes designed to securely mount Foredom's MADC20 Dust Collector with its casters removed.

Specifications:
Height from Floor to Top Work Platform: 43-3/4" at highest setting, 30-1/2" at lowest setting
Footprint: 16" x 22"
Weight: 44 lb, Ship Weight: 53 lb via UPS
Shipping Dimensions: 34-1/2" x 22-1/4" x 20"

Power Cord: 6' Long
Power Outlets: 4 North American 3-prong outlets, max 9.6 Amps



Handler Pro Tech Elite 200-MFW Workstation

The Handler Pro Tech Elite 200-MFW Workstation combines a compact enclosed workspace with the proven 200C dust collector base, delivering strong multi-stage suction and ULPA filtration for dental labs, jewelry work, and precision finishing applications. Featuring 9-stage suction control for precise airflow adjustment, this unit captures 99.9995% of particles up to 0.12 microns while maintaining quiet operation at 55dB. The ergonomic design includes automatic LED lighting, flexible entry curtains, contoured armrests, and a quick drop-in top for easy setup. With 150 CFM maximum airflow, triple filtration system, and included casters for mobility, this 115V workstation provides a clean, well-lit environment ideal for finishing, polishing, sandblasting, and precision fabrication work.

SPLASH HOODS

Click or scan to view



86A - The Avenger Hood - 10" wide

- Removable acrylic shield is coated to prevent scratching
- Hood & bottom pan are separate with no hardware for easy and fast cleaning
- A 3" dimple in the rear that can be cut off to add suction
- The 86A can be used with any lathe or handpiece

Shipping Wgt.: 6 lbs. [2.7 kg]
Dimentions: 10" W x 15" D x 12" H [25cm x 38cm x 30cm]



86D Splash Hood - 6" wide

- New and improved sleek design
- Sturdy powder coated steel welded construction
- Steel insert pan – slides out for easy cleaning
- Bright, long lasting LED light with side mounted on/off switch
- Large, adjustable protective safety shield prevents splashing
- Rubber padded bottom for safety to prevent slipping and movement during procedures
- Comes fully assembled

Shipping Wgt.: 9 pounds
Dimensions: 12" W x 6" D x 10" H

BEST IN CLASS



Resin - 6" wide

86RHL - Resin Splash Hood with light, shield and insert pan.

Shipping Wgt.: 4 lbs [1.8Kg]
Dimensions: 12" H x 6" W x 10" D



Aluminum - 8" wide

84WL- Aluminum Splash Hood with light, shield and insert pan.

Shipping Wgt.: 4 lbs [1.8Kg]
Dimensions: 12" H x 8" W x 12" D



Aluminum - 10" wide

85WL - Aluminum Splash Hood with light, shield and insert pan.

Shipping Wgt.: 5 lbs [2.3 Kg]

Dust Hood - MADCH-1

Made of heavy gauge sheet metal construction with non-skid pads on the bottom and holes for mounting on workbench, (screws NOT included).
2-1/4" (57 mm) elbow MA825 fits MADC20 Dust Collector or other dust collection hoses.
6-1/2" (16.5 cm) high x 4-5/8" (11.7 cm) wide 8-5/8" (21.9 cm) deep, 1.85 lb pkg wt.



FURNITURE - PRO TECH® LITE

Click or scan to view



PTL-1 Pro Tech® Lite Work Station

- 42" Wide x 24 ½" Deep effective work surface
- Resilient, all steel construction and solid work surface
- Powerful, hidden and quiet 550A dust collector with disposable HEPA filter, easy to access and easy to clean
- Available without 550A dust collector
- Hidden suction inlet with screen and shield located on the work surface
- Two storage drawers (16"L x 13 ½"W x 5-1/2"H) for tools and supplies
- Two-tier shelf for case pans with retractable and swivel LED light
- Work station available without shelves and LED light
- Pop-up duplex power supply with 2 USB ports
- Stainless Steel surface protector
- Comes fully assembled, no installation required and plugs into standard wall outlet

Shipping Weight: 250lbs (204.1Kg)
Unit Dimensions: 42" W x 24" D x 54" H



PTL-215SP Single - Pedestal Bench

- All 18 gauge welded steel construction with an oven cured, powder coated painted finish
- Spacious 6" riser or chase to run air, gas and electric lines
- Totally enclosed, powerful and quiet 62-II Dust Collector pre-wired for ease of operation
- Double tier shelf to hold cases conveniently
- Six outlet pre-wired power strip
- Gas valve
- LED light
- Retractable air line with pressure regulator and blow gun
- Removable 16" x 12" stainless steel work surface protector
- Laboratory grade, solid, smooth Resistop© work surface that resists stain and scratches
- Two suction inlet options:
  - Bench top 3" suction inlet with blast gate **OR**
  - In drawer suction complete with protective acrylic shield and padded comfort arm rest
- Four drawers for storing tools and equipment

Dimensions: 42" W x 30" D x 32" H work surface

BEST IN CLASS



PTL-215WS Pedestal Bench

A two technician pedestal bench containing five drawers for each technician. Bench also includes a 60UFC dust collector for two technicians, 2 fishmouths, flexible ducting, clamps, blastgates and 2 lighted remote switches mounted on vertical risers. Finished in a baked, durable coating and supplied with Resistop tops.
Shipping Weight: 500lbs (204.1Kg)
Unit Dimensions: 42" W x 49" D x 32" H [107cmx124cmx81cm]



NEW PTL-241-3DSR Printing Platform

Engineered to deliver an ergonomic and durable solution, this cabinet combines style with high-performance functionality.
Designed exclusively for 3D equipment, it offers a sleek and modern design that complements any workspace. With the Handler Pro Tech Lite, your valuable equipment is not only protected but also showcased in a cabinet that seamlessly merges aesthetics with practicality.



PTL-231 Plaster Bench

PTL-231 is a sensible design that combines art & engineering. It is a compact, stylish, and affordable plaster bench that provides adequate workspace for the dentist or lab technician to pour models and trim models using a model trimmer. The installed sink and gooseneck lab faucet are convenient and necessary for lab operations. PTL-231 is manufactured in the USA of sturdy, oven cured powder coated steel with sturdy pharmaceutical grade phenolic resin work surface and leg levelers for stability. No assembly required. Cabinet color options are available.
Dimensions are 35" W x 24" D x 36-3/4" H, scalable – customize to fit any space. Shipping weight is 250 Lbs.



PTL-241 Milling Platform

Workstation designed for milling and hi-tech applications with a single door cabinet for dust collector, small compressor, or PC and four lockable drawers to secure expensive inventory of pucks, blocks, burs & tools. Cabinet width is 35" with durable and sturdy pharmaceutical grade phenolic resin work surface with cable drops and ample space for a milling machine, computer monitor and keyboard. Also includes leg levelers provide excellent stability & no vibration. No assembly required. Cabinet color options are available.
Dimension is 38" W x 27" D x 36-3/4" H,
Shipping weight is 225 Lbs.



245TILT Plaster Storage Cabinet

This 18" [46cm] wide cabinet makes it convenient and ergonomic to store heavy plaster or stone. The 245TILT is built of heavy gauge sheet steel with Resistop work surface. The door tilts out from the top allowing the user to easily fill up to 50 pounds of plaster or stone. Cabinet is finished in an oven-cured, powder-coated finish. Shipped complete with 6" Backsplash, may be ordered with 6" riser option at additional cost. Multiple cabinets can be placed side by side for various types of plaster or stone storage.
Shipping Wgt.: 120 lbs. [54.5 kg]
Dimensions: 18" W x 23 3/4" D x 36 3/4" H [46cm x 58cm x 92cm]]

HOW DOES HANDLER'S CUSTOM LAB LAYOUT WORK?

Our lab layout service is a process of matching the best solution and configuration to your requirements. A team of experienced specialists is available when preparing a renovation or new location

1

DETERMINE:

Contact your authorized dealer or Handler to begin the process.

Share your lab AutoCAD (.dwg) blue print file with us. Don't have an AutoCad file? No problem! Provide a PDF or even a hand drawing.

Include information about your work flow and requirements in the lab as you can. Fill out the attached form to help you get started.

2

DESIGN:

Handler will design a lab space using decades of experience and Handler's full line of Pro Tech® Lite furniture and Red Wing® equipment products.

During the design process, we will work with you to answer any questions we might have along the way.

Handler will also provide you with the costs of the items that are proposed and we provide guidance for shipping and installation.

3

DELIVER:

Once we receive signed authorization to proceed and payment terms are arranged, Handler will manufacture the solution in the designated time frame specified in the quote and have everything ready for pick up and delivery.

3D PRINTING

Introducing the Handler Pro Tech® Lite 3D Equipment Cabinet: Where Form Meets Function!

Engineered to deliver an ergonomic and durable solution, this cabinet combines style with high-performance functionality. Designed exclusively for 3D equipment, it offers a sleek and modern design that complements any workspace. With the Handler Pro Tech Lite, your valuable equipment is not only protected but also showcased in a cabinet that seamlessly merges aesthetics with practicality.



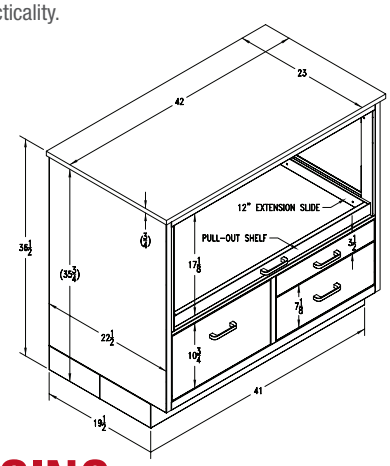

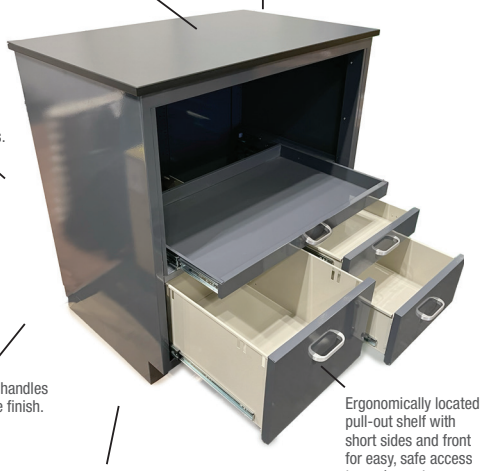

DENTURE PROCESSING



26105SSWC Boilout/Curing Unit

Handler Boilout/Washout/Curing Unit complete with powder coated cabinet. Built & designed by Handler. The 26105SSWC will provide your prosthetics laboratory with years of service at almost 40% savings over competitive units. Vented cabinet with internal shield. Heavy duty recirculating pump, four faucet washout-tank-turn on walk away de-wax dentures, partials and flasks. Curing unit holds 8 two flask compresses-16 flasks, Heavy gauge stainless steel for durability & functionality. Sinks built into stainless steel top with seamless design. Marine Edging keeps water from running off work surface. Built by Handler in the U.S.A.

Shipping Wgt.: 350 lbs [158.8 Kg]
Unit Dimensions: 35" W x 24" D x 36-3/4" H [89 cm x 61cm x 93 cm]



26102SSWC Curing Unit

The 26102SSWC is the ultimate curing device for processing multiple dentures properly and efficiently. This unit is manufactured of heavy gauge stainless steel with seamlessly integrated curing tanks, backsplash and marine edge to stop water from running off. Each tank is insulated to retain heat and can hold up to 16 flasks for maximum productivity in the denture lab. The 26102SSWCEL model is electrically powered and has two 2Kw copper heating elements electrically controlled. Each heating element has a built in safety shut off. Please specify 208V, 220V or 240V when ordering. The unit can also be purchased for use with natural or propane gas, model 26102SSWCG. Each burner produces 7,500 BTU's. Also included with each unit is a lid for each tank and stainless steel flask trays.

Shipping Wgt.: 350 lbs [158.8 Kg]
Unit Dimensions: 35" W x 24" D x 36 3/4" H [89 cm x 61cm x 93 cm]



2010DCU - Two-Stage Digital Curing Unit

The 2010DCU Denture Curing Unit is a sophisticated curing unit featuring:

- 2-Stage curing unit with a digital control panel on which sequences of polymerizing times and temperatures can be programmed as required by user.
- The time of each step can be set between 0 and 999 minutes. The end temperatures at each plateau can be regulated by the user between 32ºF and 210ºF (0ºC and 99ºC).
- To enable the user to see the actual program status at all times, the curing unit has a synoptic display.

Unit Dimension: 13.8" H x 16.5" W x 14.9" D Tank Dimension: 11" H x 10" W x 10" D (Weight: 45 lbs [17kg]
Power Supply: 115V, 50/60Hz, 13A Consumption: 1500 W



236FH-2 Fume Hood

Handler has designed a hood with 600 CFM suction capacity to remove fumes and odors from laboratory processing. The fume hood is mounted onto a studded wall directly above the fume source and the exhaust ducted to a suitable location outside your building. Its size makes it convenient to install in most laboratories; it is constructed of heavy gauge sheet steel and powder coated in a durable, baked finish.

Shipping Wgt. 125 lbs. [56.7 Kg]
Unit Dimensions: 42"W x 20"D x 39-3/8"H



448PP - 8 Qt Pneumatic Pressure Pot

BEST IN CLASS

Made of sturdy stainless steel The new 448PP pressure vessel is built to provide 20 psi pressure* - while the acrylic resin is curing – forming a dense crosslinked repair for the dentist and patient.

The 448PP will not only allow for proper denture repair and relines. The 448PP is shipped complete with pressure gauge, safety valve, air valve to introduce air into the pot, plus an air hose ready to connect to your compressor air source.

Shipping Wgt: 12 lbs [5.4 Kg]
Unit Dimension: 19" L x 8" H / Outside Diameter: 11" / Inner Diameter: 9 3/4" / Depth: 6"

* maximum internal pressure with safety valve = 22 psi



61B Two Flask Compress

Sturdily built of bronze alloy, its rustproof cast body will provide years of service. Two stainless steel springs give equalized compensatory pressure during curing operation. A suitable allen wrench, wood capped holding handle and brass lifting handle are supplied with each compress. Flasks not included.

Shipping Wgt.: 8 lbs [3.6 Kg]
Unit Dimensions: 4-1/8" L x 2-1/2" W x 7-1/2" H [11cm x 6cm x 19cm]



44U Uper Atlas Flask and 44L Lower Atlas Flask

Flasks are forged of special alloy bronze to provide years of durable service. Fitted with hardened stainless steel alloy rear tapered guide pins, this ejector type flask has long been a favorite of leading Prosthodontists, dental schools and commercial laboratories. Dropped forged with glass-like smooth surfaces, models are easily ejected with the aid of the bottom ejection disc.

Shipping Wgt.: 3 lbs [1.4 Kg]
Unit Dimensions: 4" L x 3-3/4" W x 2-1/4" H [10cm x 10cm x 6cm]



38 Big Boy Flask Press

A Heavy Duty Single Flask Press manufactured of malleable/ductile cast iron for durability and long wear, with alloy steel shaft, grey iron handle and malleable/ductile iron pressure plate. Holes in frame allow for easy bench mounting, or 38A Clamps may be utilized for easy bench mounting and/or removal. Big Boy Flask presses are designed for the busy laboratory.

Shipping Wgt.: 23 lbs [10.4 Kg]
Unit Dimensions: 10" L x 4-1/2" W x 8-1/2" H



Blackstone Industries unites 5 premier brands to deliver a comprehensive offering for dental professionals to excel.

Our branded products are reliable – Professionals demand quality and reliability from our products to perform as needed, when needed, allowing you to focus on your creativity.

We answer your questions – Our staff of experienced professionals are available to assist with support and information to keep your equipment operational.

We support what we sell – Our products are guaranteed to operate as specified, so you don't have to worry.